5 September 1975, Volume 189, Number 4205 SCIENCE

Lodestone Compass: Chinese or Olmec Primacy?

Multidisciplinary analysis of an Olmec hematite artifact from San Lorenzo, Veracruz, Mexico.

John B. Carlson

In entering upon this subject [magnetic directivity and the compass], it may be well to pause for a moment to consider the incalculable importance of the discovery of the magnetic compass, as the first and oldest representative of all those dials and pointer readings which play so great a part in modern scientific observation. . . . No apology is needed, therefore, for an attempt as thorough as possible to ascertain what was the oldest form of compass . . . and when its successive developments were introduced.

This preface to Needham's study (*1*) of the development of the magnetic compass in his monumental work *Science and Civilisation in China* expresses the spirit in which I undertook the study of the properties of a unique and curious Olmec artifact in late 1973.

The artifact, henceforth designated M-160 (Michigan sample), was found in situ (*2*) at the Early Formative Olmec site in San Lorenzo, Veracruz (see Fig. 1). It was excavated by P. Krotser of the Yale University excavation project headed by archeologist M. D. Coe. According to Coe's analysis (*3*) the fill in which M-160 was unearthed contained no material later than the San Lorenzo A and B Phases, which have been well dated by radiocarbon methods at 1400 to 1000 B.C. (*4, 5*); according to current correlations this unequivocally places the manufacture of M-160 earlier than 1000 B.C. (*6*). In general appearance, the artifact (*7*) . . . Immediately suggested to Coe that it might be part of a compass. To test the possibility, he cut a piece from a cork mat, placed the object on it, and floated it in a plastic bowl full of water. It consistently oriented itself to the same direction, which was slightly west of magnetic north. Turned over, the pointer always aligned itself to a consistent orientation slightly east of magnetic north.

After Coe established in 1967 that the fragment M-160 would perform as a lodestone floater compass—a geomagnetically self-orienting device—no further investigations were carried out until the experiments described in this article were undertaken.

In studying the properties of M-160 and later interpreting them to reconstruct the original function of the artifact, I used an interdisciplinary approach which is of interest in itself as well as in the conclusions reached. Adaptations of Mössbauer spectroscopy, spinner magnetometry, and archeomagnetic dating have been applied here to problems of chronology and cultural interaction. The study thus serves as an example of the application of techniques of physical science to archeological questions.

The analysis of M-160 indicates that the Olmec may have discovered and used the geomagnetic lodestone compass earlier than 1000 B.C.—predating the Chinese discovery by more than a millennium. Archeologists often find it useful, when material for interpreting the cultural significance of artifacts is sparse, as with the Olmec, to draw analogies between ethnographic reality and archeological materials on both an intracultural and cross-cultural basis (*8*). There is evidence, for example, for a Mesoamerican as well as a Chinese penchant for the directional orientation of the dwellings of the living and the interments of the dead. Such comparisons shed a revealing light on the interpretation of Olmec practices and the function of M-160.

Mesoamerican Background

Although the extent, nature, and importance of formative Olmec civilization have been discussed by Americanists for more than a century, the origins of the Olmec remain unknown. Places conjectured to be the original heartland of Olmec civilization include Veracruz, the Valley of Oaxaca, and Guerrero. Olmec culture is now well characterized by ceremonial centers, which are generally oriented 7° to 12° west of north; massive thrones and stone sculptures, including the colossal basalt heads of San Lorenzo, La Venta, and Tres Zapotes; ceremonially buried offerings of carved jade and serpentine; and flat and concave mirrors, beads, and pectorals made from polished iron ores. It is clear from both archeological excavations and studies of iconography and style that Olmec is one of the fundamental, generative civilizations of Mesoamerica. In the Olmec, we find roots of the number system, the calendar, hieroglyphic writing, and many of the archetypal images and stylistic elements found in subsequent Mesoamerican cultures.

Olmec skill in working iron ores is amply evidenced in three types of artifacts (*9–11*): (i) thumbnail-sized flat mirrors polished on only one side, which suggests that they were used in inlay; (ii) highly polished "multidrilled" beads; and (iii) large, concave parabolizing mirrors (*12*) up to 10 cm in diameter with a circular or elliptical figure surrounded by an optically flat area. The large polished mirrors are of high optical quality on one side; the other side is unfinished. Microscopic examination shows only straight line scratches or work marks of random direction—no curved marks. The purpose and technique of manufacturing these beautiful mirrors is unknown. They have pierced holes for suspension from a cord, presumably for use as pectorals, and one of the large mirrors has been used successfully to focus sunlight and start fires (*13*).

The author is instructor in astronomy in the Astronomy Program, Department of Physics and Astronomy, University of Maryland, College Park 20742. The substance of this article was presented on 5 September 1974 at the 41st International Congress of Americanists in Mexico City.

In 1966 Flannery (*14*, pp. 79–117) discovered a "barrio" in which iron ore mirrors were produced in the Early Formative deposits at San José Mogote in the Valley of Oaxaca. Ceramics found at the same level in this San José Phase site have been dated between 1400 and 1000 B.C. Nearly identical mirrors were discovered by Coe (*4*, pp. 41–78) in Early Formative San Lorenzo Phase deposits at San Lorenzo, Veracruz. This find led Flannery (*14*) to discuss an exchange of exotic trade items between San Lorenzo and the Valley of Oaxaca during the Early Formative period, an idea further supported by Wheeler Pires-Ferreira's thesis, "Formative Mesoamerican exchange networks" (*9*).

Development of the Compass

Having established the sophistication of Olmec lapidaries in working magnetic minerals, we now consider what information about the properties of lodestone may have been available to the Olmec. A first step in the discovery of the compass is observation of the attractive properties of lodestone. The term lodestone is usually applied to an iron ore mineral that attracts bits of iron or other lodestones; I will use it to mean any iron ore mineral with a geomagnetic remanent magnetization. I have tried polishing magnetite and found that the dust and fine grains will cling to this lodestone. Thus, in polishing iron ore mirrors the Olmec lapidary might well have discovered their attractive properties. If the Olmec preserved meteoritic iron, they could also have observed the lodestone's attraction for iron.

Also probable as first or successive steps in the development of the compass are the critical discoveries of magnetic polarity and the geomagnetically orienting properties of lodestone. For example, by suspending a lodestone from a filament isolated from air currents or by floating it on wood in water or directly on liquid mercury, one might discover that the lodestone will consistently orient itself in a particular direction. This "zeroth-order compass" could be devised to indicate any desired direction—for example, an astronomical direction, one of the cardinal points. In calling the lodestone a zeroth-order compass I refer to the use of its self-orienting properties with no knowledge of its tendency to point north-south. In this sense, it is not a true compass.

The magnetic polarity of needles or bars of magnetic mineral might be discovered by noting the response of two stones to each other or seeing the magnetic field pattern in magnetite dust or iron filings. Almost 2000 years ago, the Chinese learned that the directive property of lodestone could be transferred to a piece of iron. Since the Olmec apparently did not possess iron, we must concentrate on the uses of lodestone. At this level of understanding, one might be totally unaware of the property of magnetic polarity or the fact that the earth acts like a large magnet with the north and south poles corresponding roughly to celestial north and south. The geomagnetic field was a much later discovery in China and the Western World.

The next step in awareness of the properties of lodestone is the discovery of the true orientability of the poles in the approximate north and south cardinal directions of the earth. With this step the lodestone becomes a first-order compass. A long magnetized bar or needle has a tendency to have its magnetic poles at the ends, so that it orients itself roughly north-south. This tendency is independent of the knowledge or purpose of the artisan (for instance, whether the sample was purposely cut from a north-south deposit of native mineral). The user of a first-order compass would probably calibrate or off-

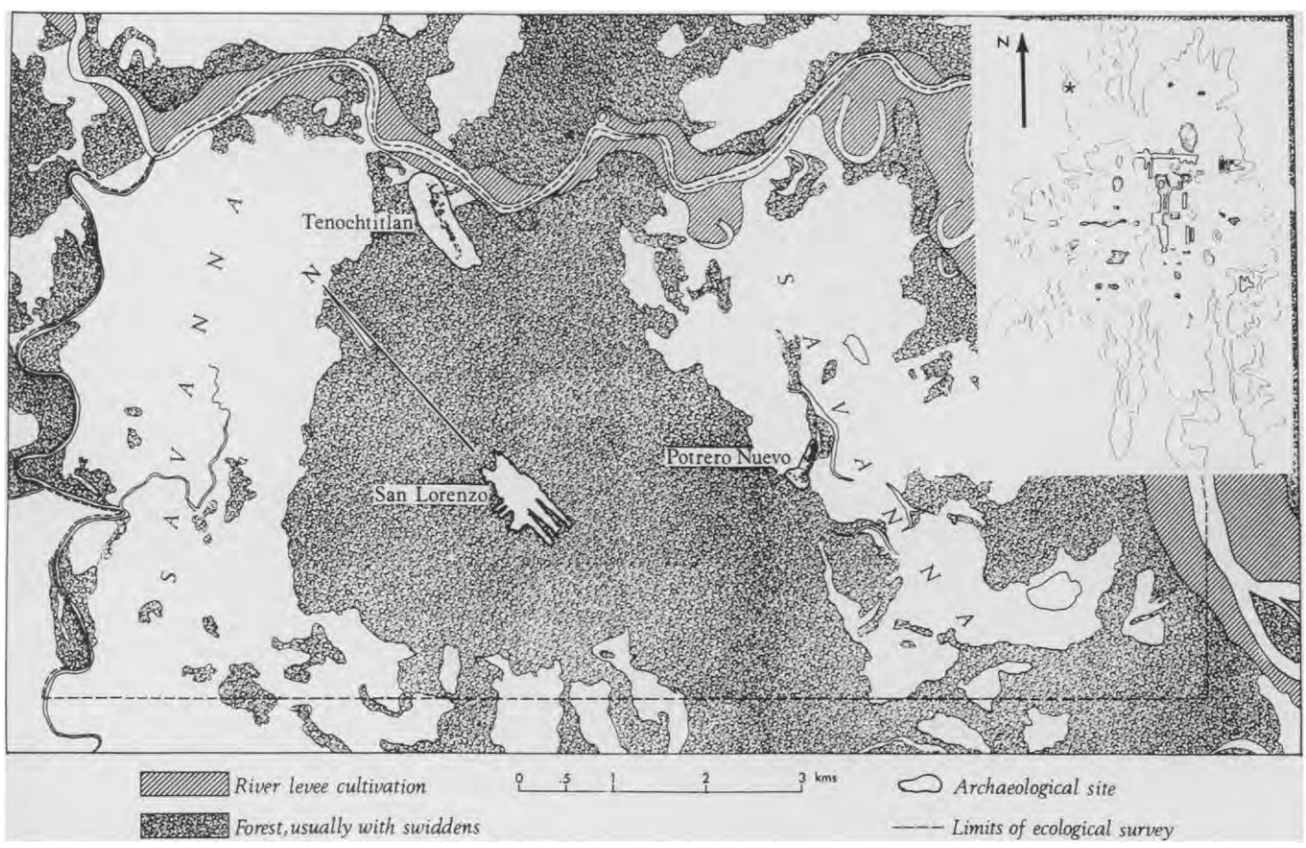

Fig. 1. Map of the San Lorenzo Tenochtitlán area of southern Veracruz. (Inset) Simplified topographic map of the San Lorenzo archeological site, showing the cardinal orientation of the central mound complex and the partially man-made San Lorenzo plateau. The shape of the almost 50-m-high plateau has stimulated speculation that the Olmec may have visualized the site as a gigantic animal effigy. (*)Location of the pyramidal mound B2-1 where M-160 was found. [Large map from Coe (*4*); inset map from Coe (*3*)]

set it to orient itself to the north-south direction and would be unaware of the geomagnetic deviation (the fact that a compass points toward geomagnetic north and not true north). At this time also, polarity would become apparent to the extent that one end of the compass would always point in one direction (either north or south). This question has been discussed in the Chinese context by Needham (*1*, pp. 236, 333).

The development of what I call a second-order compass involves a good understanding of magnetic polarity and awareness of the geomagnetic deviation and the fact that this deviation changes for different places on the earth. This is a very sophisticated discovery and is necessary for compass navigation.

One further step involves the discovery that over generations, the magnetic deviation changes with time as well as place. As far as we know, the appreciation of this secular variation is a relatively modern discovery (17th century). Even today, the physical causes of the changes in the geomagnetic field, and even its origin, are not well understood.

The discovery of the attractive properties of lodestone and the early history of the compass in China and the Western World are well treated by Needham (*1*, pp. 229–334). The properties of the lodestone were apparently known to the Greeks; the earliest observations were attributed to Thales (6th century B.C.) (*1*, p. 231). A comparable antiquity is indicated in China, perhaps not as early as Thales, but definite references exist for the 3rd century B.C. (*1*, p. 232). According to Needham, the approximate north-south orienting ability of a bar of lodestone was discovered by the Han Dynasty Chinese no later than the 1st century A.D. and perhaps as early as the 2nd century B.C. (*1*, p. 333).

> By the late Thang period (+8th or +9th century) the declination, as well as the polarity, of the magnet, had been discovered, antedating European knowledge of the declination by some six centuries. The Chinese were theorizing about the declination before Europe knew even of the polarity (end of the +12th century).

This discovery was developed into what was known as the "south-pointing spoon," which will be discussed in greater detail later.

Once the orientability of lodestone became known, what was the compass used for? In China it was used first in divination and geomancy and only much later for navigation (*1*, p. 239).

> That so fundamental an instrument did in fact spread so slowly is not difficult to understand once we realize that its original discovery took place in connection with the divination process of imperial magicians; and that since it developed in an agrarian-terrestrial rather than in a primarily maritime civilisation, its use was for centuries limited to a specific Chinese pseudoscience, namely Taoist geomancy, the minutiae of which were carried to a high level of refinement. The adoption of the compass by Chinese sailors was probably long retarded by the fact that all through the Middle Ages river and canal traffic predominated over ocean voyages.
>
> ... Of all the forms of divination, geomancy was perhaps that which become most deeply rooted in Chinese culture throughout the traditional period. ... The term geomancy has other meanings in other civilisations, but for the Chinese it meant the "art of adapting the residences of the living and the tombs of the dead so as to cooperate and harmonize with the local currents of the cosmic breath." Known as the science of "winds and waters" (feng shui) [*15, 16*] it did not mean merely the winds of everyday life, but rather the chhi or pneuma of the earth circulating through the veins and vessels of the earthly macrocosm. The waters, too, were not only the visible streams and rivers but also those passing to and fro out of sight, removing impurities, depositing minerals, and like the chhi affecting for good or evil, the houses and families of the living, as also the descendents of those who lay in the tombs. The history of the magnetic compass is only understandable in the context of this system of ideas, for this was the matrix in which it was generated [*17*].

This discussion of the development and use of the compass in China is quite relevant to a comparative argument for the possible use of a first-order compass by the Early Formative Olmec.

Chinese and Olmec Geomancy

The question of the pre-Columbian Mesoamerican development and use of the lodestone pointer compass involves an examination of the orientation of Olmec (and Maya) ceremonial centers and buildings from an archeomagnetic point of view. Fuson (*7*, pp. 494–511) has discussed the problem of Maya site orientations from a geomagnetic as well as an astronomical perspective; hence, I shall not consider the Maya here. It has, however, been noted that the axes of many Olmec ceremonial

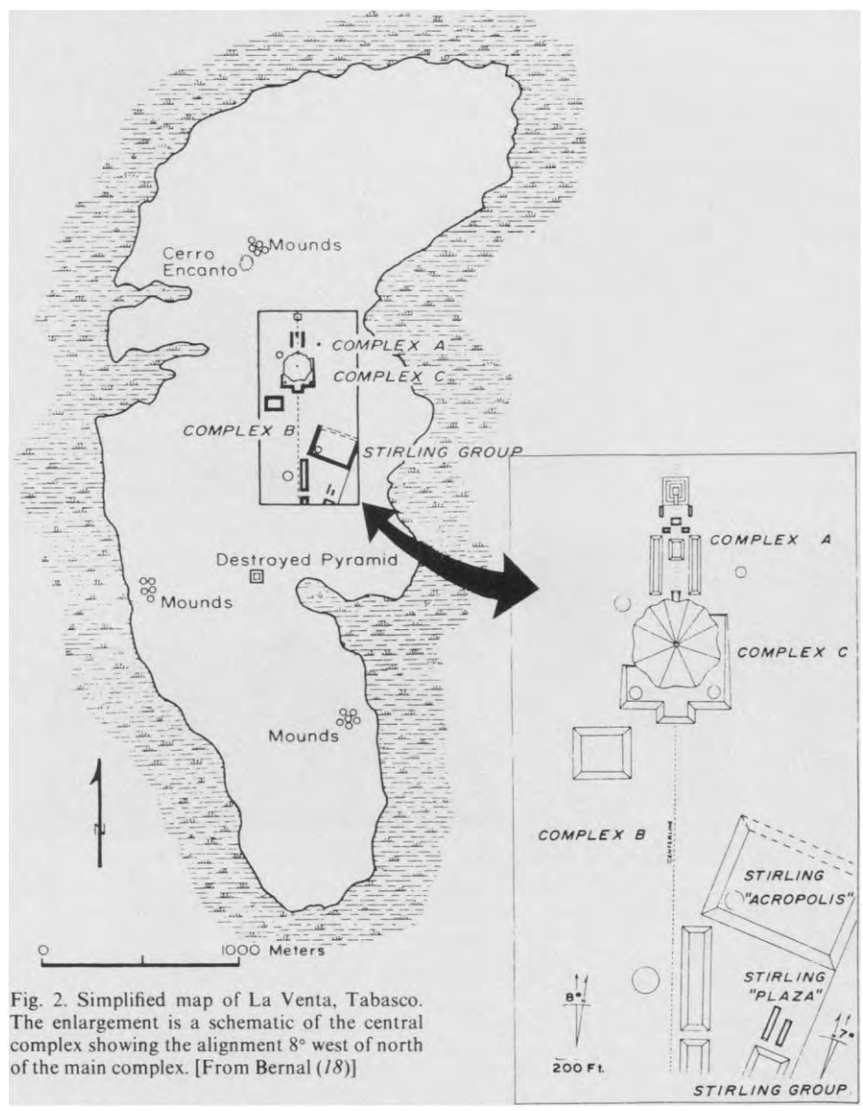

Fig. 2. Simplified map of La Venta, Tabasco. The enlargement is a schematic of the central complex showing the alignment 8° west of north of the main complex. [From Bernal (*18*)]

centers form a family of alignments approximately 8° west of true north (*14*). Until the observations are better documented, we can only speculate that these alignments were not arrived at randomly. Several new sites have been discovered, some only by aerial photography. The study of Olmec site orientations is at best preliminary and more information on this subject is needed.

Many of the Olmec earth mound complexes have alignments approximately 8° west of north (*14*, p. 100). Examples are the main complex of La Venta (see Fig. 2) (*18*, p. 34), with the exception of the Stirling Group; Laguna de los Cerros (*18*, p. 47); and the structure at Huitzo, Oaxaca (*14*, p. 87). According to Flannery (*14*, p. 100), "The elite and 'ceremonial' architecture of the Formative Valley of Oaxaca shows some similarity of tradition with the Gulf Coast. The use of adobe walls and colored clay in the construction of platforms, and the orienting of those platforms 8° west of north, are all shared characteristics." The orientation of the probably artificially shaped San Lorenzo plateau, with its unusual ridge groupings and central complex of mounds, is, however, roughly true north-south (*3*) (see Fig. 1). This is also true of the buried ceremonial caches. Coe (*19*, p. 85) used the orientation to discover other buried monuments at San Lorenzo. Again, referring to the rich ceremonial offerings of jade and serpentine at La Venta, Coe says (*19*, p. 63), "Many of these are either placed exactly on the center line running through the site, or in relation to it, and the offerings themselves are often laid out so that their long axis conforms with this center line orientation."

This evidence of careful attention to the orientation of ceremonial sites, architectural construction, burials, and offerings indicates the existence of geomantic practices among ancient Olmec. It is of interest to compare the possible geomantic use of the lodestone compass in Olmec culture with the historical use of the compass in Taoist geomancy beginning in Han Dynasty China (roughly 200 B.C. to A.D. 250).

Nonrandom geomantic orientations may be based on four objective factors: astronomical, geomagnetic, climatological (prevailing winds), or local geological or topographical features (such as rivers or ridges). It seems clear that if the orientations of Olmec sites contain nonrandom alignments, the principles of alignment are probably astronomical or geomagnetic. No conclusive answer can be offered at this time. Hatch (*20*) has presented a highly speculative argument that the orientation of La Venta 8° west of north is based on the setting azimuth of the Big Dipper. Indeed, at La Venta (latitude 18°N) for the period 1000 to 500 B.C., the Big Dipper does set roughly 8° west of north, depending on which part of the constellation is referred to (*21*) (see Fig. 2).

As an aside, I call attention here to a curious parallel in the Han Dynasty Chinese culture involving the diviner's board, or shih, whose "heaven-plate" contained the image of the Big Dipper or Great Bear in the center (see Fig. 3a). The diviner's board was composed of two plates, the lower one being square to symbolize the earth and cardinal directions (earth-plate); the upper one round and free to pivot to symbolize the heaven (heaven-plate). The heaven-plate always bore a representation of the constellation of the Dipper and would imitate the diurnal circle of the handle of the Dipper pointing out the 24 successive azimuthal compass points. The theories of Wang Chen-To are described and expanded on by Needham (*1*, pp. 261–268, 333) concerning the fascinating problem of how the representation of the Dipper on the heaven-plate transformed into an actual model of the Dipper itself in the form of a lodestone spoon pivoted on a polished bronze earth-plate (see Fig. 3, b and c).

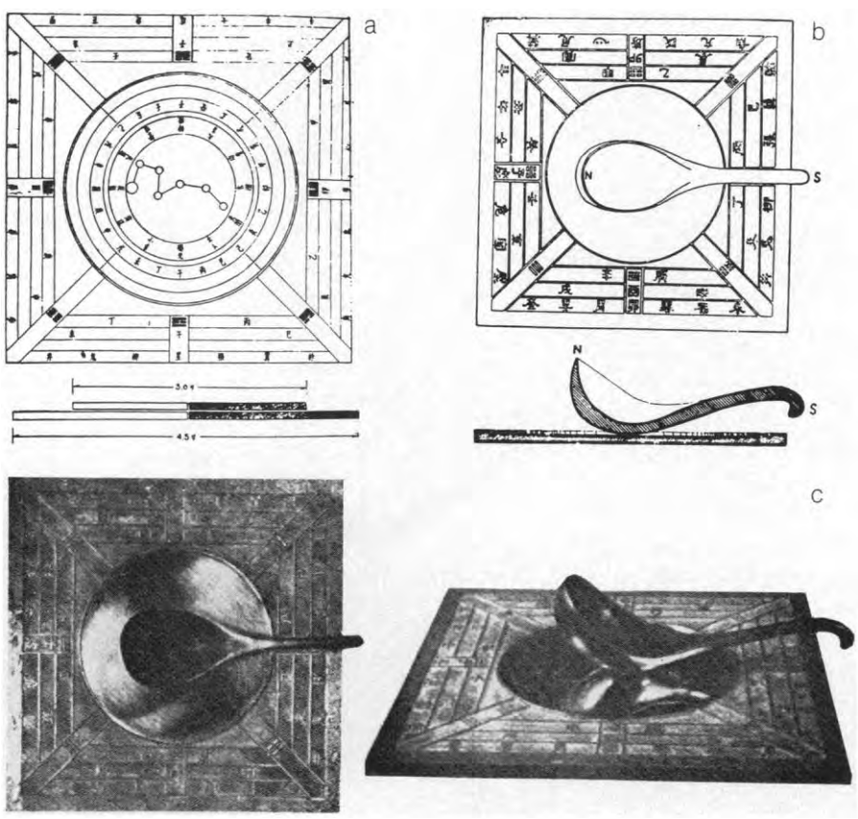

Fig. 3. (a) Diagrammatic reconstruction of the Han period diviner's board (shih) made of bronze or painted wood. The square earth-plate showing cardinal directions is surmounted by a rotatable disk or heaven-plate (see cross section) with a representation of the constellation of the Big Dipper or Great Bear in the center. The tail of the Bear becomes an azimuthal pointer. North is at the top. (b) Diagram with plan and elevation of the Han earth-plate and lodestone spoon. The spoon is carved and balanced to rotate freely on the polished bronze plate in response to the geomagnetic torque. (c) Working model of a south-pointing lodestone spoon and bronze earth-plate of the shih reconstructed by Wang Chen-To. This may be the earliest form of Chinese geomantic lodestone compass, referred to in writings of Wang Chhung in A.D. 83. [From Needham (*1*); the drawings and reconstruction are by Wang Chen-To]

> In the round heaven-plate of the *shih* we may recognize the lineal ancestor of all compass-dials....
>
> ... [T]he tail of the Great Bear may be unhesitatingly denominated the most ancient of all pointer-readings, and in its transference to the "heaven-plate" of the diviner's board, we are witnessing the first step on the road to all dials and self-registering meters....
>
> ... Among the symbolic models used was one representing the Great Bear (the Northern Dipper)—so important in Chinese polar-equatorial astronomy—carved into the shape of a spoon. This replaced the picture of the Great Bear carved on the heaven-plate of the diviner's board [the second step]....
>
> ... The model spoon was probably first of wood, stone, or pottery, but in the +1st century (and possibly already in the -2nd century), the unique properties of magnetite suggested in China the use of this substance [the third step]. Since polarity would establish itself along the main axis of a bar of the mineral, whether or not it was removed from the rock in a north-south direction (i.e., in the Earth's magnetic field), the "south-pointing spoon" was discovered. Some examples, of course, must have pointed north, as indeed the texts indicate.

The carved lodestone spoon or dipper has become the manifestation of a celestial

archetype replacing the heaven-plate. It is balanced and free to pivot in the center of the earth-plate with the handle seeking geomagnetic south. This "south-controlling" or "south-pointing" spoon was thus probably derived from the appearance of the Big Dipper and was the first Chinese geomantic compass. In general, I find the arguments of Hatch unconvincing, but the issue of astronomical orientation of Olmec sites is still open to further investigation.

Wheatley (*16*) describes the geomantically inspired ancient Chinese city as a "cosmo-magical symbol." According to Chinese geomantic principles of design, the city was constructed as a cosmological microcosm oriented to the cardinal directions. Wheatley discusses the ancient urbanization process at seven "regions of primary urban generation" including China and Mesoamerica. His thesis, that the urban center develops in a three-stage process—central public shrine, ceremonial center, and compact city—emphasizes the developmental similarities in the geomantic essence of Chinese and Mesoamerican centers. The comparison becomes more apt when the Olmec are considered specifically. Similarities in the Chinese and Olmec land base resulted in apparently parallel, though not identical, ideological developments, as reflected in the structural organization of their ceremonial centers. Conceptually, all indications point to the Olmec ceremonial center as a cosmo-magical symbol.

Analysis of M-160

The artifact (see Figs. 4 and 5) is a small, carefully shaped, highly polished rectangular bar of hematite with a trapezoidal cross section. It is a fragment of a larger piece, broken off in ancient times. The greater dimensions of M-160 are 34 by 9 by 4 mm, with the trapezoidal cross section measuring approximately 3 by 4 by 8.5 by 9 mm (see Fig. 5). I estimate that this fragment is about half of the original artifact. Running down the approximate central axis of one of the large flat faces, and approximately but (I think intentionally) not exactly parallel to the edges, is a carefully executed hemicylindrical groove of diameter 2 mm. The groove is flared slightly at the finished end, which suggests that it may have been cut and polished with a cord soaked with water and polishing compound. Except for the broken end, all sides are optically flat and highly polished. Great care and purpose are exhibited in the production of M-160. The mineral is hard and brittle and its finishing and polishing must have required great skill and much time. To my knowledge, M-160 is unique in morphology among all known examples of worked Mesoamerican iron ore.

In December 1973, I received M-160 on request from the University of Michigan, where it was part of the collection of San Lorenzo iron ore artifacts awaiting Mössbauer spectral analysis. I performed several experiments in which M-160 was floated both on liquid mercury and on a

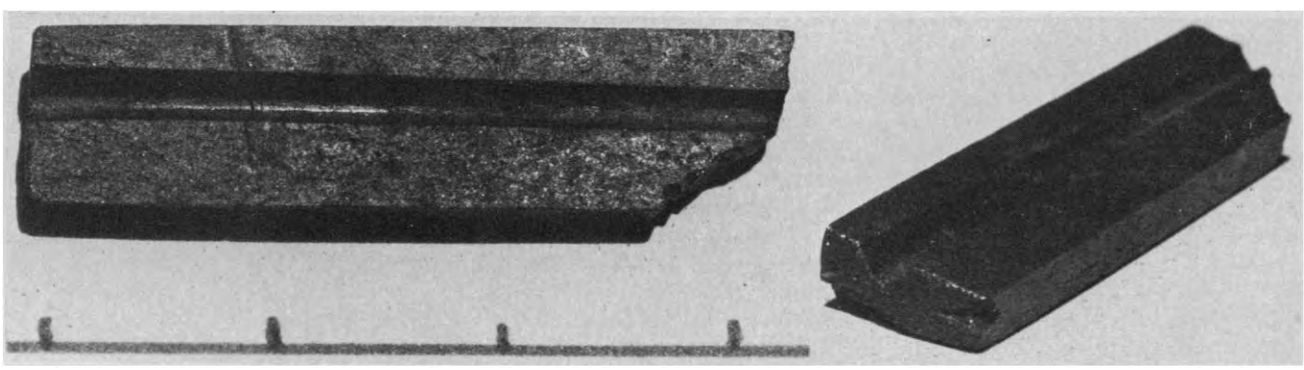

Fig. 4. Photographs of M-160. The scale is marked in centimeters.

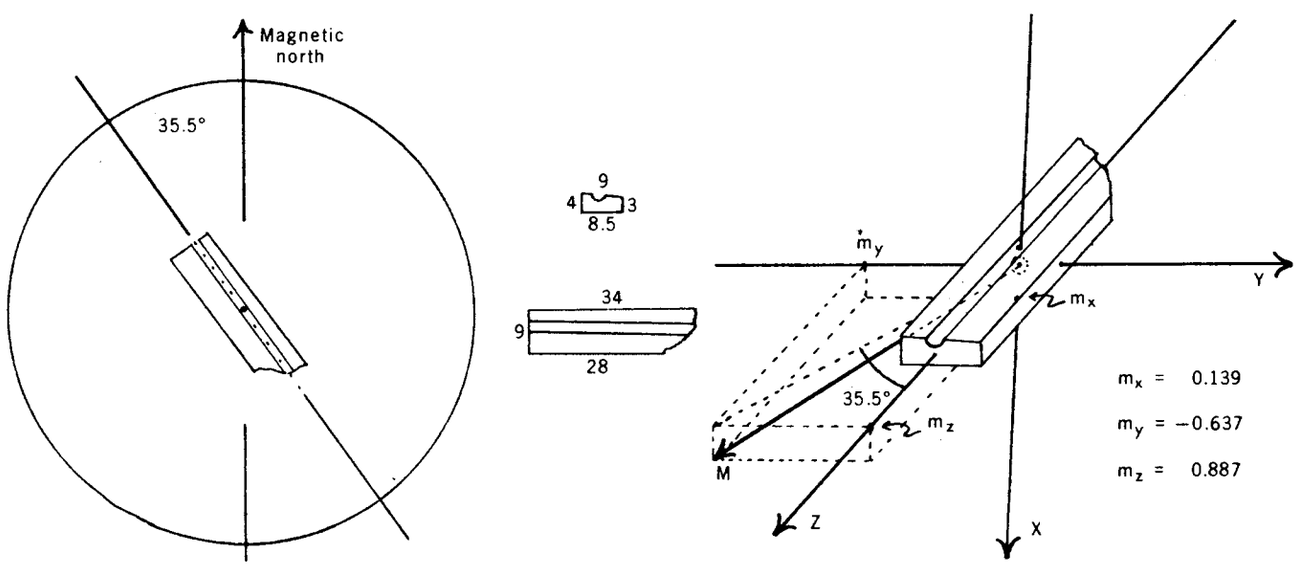

Fig. 5 (left). Top face and cross section of M-160 (dimensions in millimeters) and diagrammatic representation of the floater experiment showing the observed orientation 35.5° west of magnetic north. Fig. 6 (right). Total magnetic moment vector **M** and components of M-160. The direction of **M** is that of the north-seeking pole, *y-z* is the floating plane of M-160, and the *z*-axis is parallel to the incised groove. The artifact is not drawn to scale or exact proportion.

cork mat in water. In both cases a covered petri dish (9 cm in diameter) was used to minimize disturbances from air currents in the outdoors. With M-160 floating groove side up, alignments were made by looking down the groove and sighting a stadia rod held more than 30 m away. Bearings and reverse bearings were taken many times at three separate locations; the orientations were checked against measurements with a magnetic sighting compass. The fragment M-160 could be used consistently to align the stadia rod to within half a degree, and the average orientation was found to be 35.5° west of magnetic north, as shown in Fig. 5. The consistency of the orientations indicated that the internal magnetic field was strong enough and the magnetic moment vector was close enough to the "floating plane" (*22*) to respond quickly to the geomagnetic field even with vibrations and disturbances of the support on a windy day. (The experiment could also have been performed inside an iron-free building.)

It is apparent that the longer the original artifact (of which M-160 is a fragment), the better pointer it would be. From the maximum size for finds of polished iron ores and the extreme brittleness of the mineral, I estimate that the original bar was probably no longer than 10 cm. Also, the hemicylindrical groove is incised at a slight but noticeable angle—about 2°—to the axis of the bar. There seems to me no doubt that this was done with purpose. The care with which the bar was fashioned would indicate that a parallel groove was certainly possible if desired. Could this groove have been incised at a slight angle, as the final calibration step, to obtain a desired orientation?

I used liquid mercury to float M-160 for several reasons. Mercury is easily manufactured by heating the common orange mineral cinnabar (HgS) under the proper conditions (*7*). Liquid mercury has a density 13.6 times that of water, so virtually anything will float on it. A pool of liquid mercury would be a fascinating mirror, perhaps inducing an Olmec priest to float one of his polished iron ore mirrors. Finally, the Maya possessed liquid mercury. According to Fuson (*7*) substantial quantities of liquid mercury have been found at Copán (*23*), Quiriguá (*24*), Paraíso (*25*), and Kaminaljuyú (*26*). The Olmec may also have discovered liquid mercury and one might speculate that it played a role in the discovery and use of a floated lodestone compass.

The artifact and several iron ore mirrors were examined under a microscope with a magnification up to × 400. The high degree of polish and optical flatness is quite amazing. The techniques used to shape and polish the artifact are unknown. Flannery (*14*, p. 85) mentions the discovery of quartz and iron ore polishers and traces of hematite rouges or ochre at San José Mogote; they were probably used in the manufacture and polishing of the mirrors produced at that site. The only scratches or possible work marks found on M-160 or any of the mirrors examined were randomly oriented straight grooves. No curved work marks and no traces of adhesive, inlay, or paint were found. I have tried to polish magnetite with no outstanding success; obviously, great skill and patience were involved in the manufacturing process. Having examined the external morphology of M-160, I proceeded to investigate its internal properties.

The Mössbauer spectral technique is uniquely suited to study the archeological question of the origin of the Olmec iron ore mirrors. Direct examination of the Mössbauer spectra of an iron ore sample can give information on the mineral composition and structure of the sample. By a backscattering technique, the spectra can be taken without injuring the sample. The mineral can be identified as magnetite (Fe_3O_4), ilmenite ($TiFeO_3$), or hematite (Fe_2O_3), and one can determine the percentages of these minerals or crystalline variants in mixtures and their remanent magnetization. In many cases, visual examination of the Mössbauer spectra of similar geological specimens reveals unique characteristics which make it possible to determine the original ore deposits from which they were taken. This specific information is most apparent for magnetite and ilmenite samples.

In collaboration with Evans, Wheeler Pires-Ferreira presented an analysis and comparison of the ^{57}Fe Mössbauer spectra of iron ore samples from 25 geological and 31 archeological sources, largely from the Valley of Oaxaca and surrounding regions of Olmec influence (*10*). The geological samples obtained in the fieldwork of Wheeler Pires-Ferreira and analyzed by Evans were divided up into five general iron oxide groups: I, samples composed mainly of magnetite; II, relatively pure hematite; III, ilmenite; IV, mixture of magnetite and ilmenite; and V, mixture of magnetite and hematite. Whenever possible, the archeological samples were later subdivided into groups according to the probable geological source of origin. At the time of this analysis, it was hypothesized that Coe's iron ore mirrors from San Lorenzo (*4*, pp. 41–78) originated in the Valley of Oaxaca, probably at San José Mogote or nearby sites (*14*, pp. 79–117). At that time, however, the San Lorenzo samples had not been analyzed by Mössbauer techniques. These unpublished results are now available from Evans for eight San Lorenzo artifacts including M-160. The results only partially support the Valley of Oaxaca as the source—San Lorenzo's exchange network seems more extensive than was previously surmised.

The next step in the analysis was to obtain a Mössbauer spectrum of M-160 to determine the composition and structure of the mineral, its remanent magnetization, and perhaps its provenance. Two Mössbauer spectra were taken by the backscattering technique, using gamma-irradiation perpendicular to the long edge and back (opposite the grooved side) of M-160 (*27*). The instrument used has a 20-millicurie ^{57}Co gamma-ray source mounted on a constant acceleration electromechanical transducer with proportional counter and synchronized 512 channel multichannel analyzer. In the backscattering mode, 4 to 8 hours of integration time were required for acquisition of each spectrum. With this technique, the artifact was sampled to a maximum depth of 50 micrometers—deep enough to determine the characteristics of the bulk sample and not just surface effects. Results were consistent for both spectra. The artifact is essentially pure hematite (Fe_2O_3), not magnetite, and probably of the structural variety called gamma-hematite or maghemite. Hematite can possess a relatively strong and quite stable parasitic ferromagnetism. Analysis of the two spectra taken on perpendicular planes indicated that the magnetization vector was largely in the floating plane of M-160 and a figure of 36° west of magnetic north was obtained for the component of that vector lying in the plane—consistent with the results of the flotation experiment.

Finally, the spectra of M-160 were compared with the other seven spectra of San Lorenzo iron ore artifacts. Using Wheeler Pires-Ferreira's classification (*9*), two small flat mirrors were of group 4-B ilmenite-magnetite probably from the Valley of Oaxaca; two small flat mirrors and one small concave mirror were of group 3-A ilmenite from the same unknown place of origin as several La Venta mirrors; and two thick flat mirrors were of group 2-A hematite. These latter two artifacts and M-160 may be interpreted consistently as probably coming from the same geological deposit. The geological sample whose spectrum compares best with that of M-160 and the two thick flat mirrors was collected by Wheeler Pires-Ferreira in Cerro Prieto, Niltepec, Tehuantepec (*9*, pp. 160, 172). Such a provenance for the three San Lorenzo artifacts is entirely possible but has not been established. Unfortunately, the Mössbauer spectra of nearly pure hematite from different geological sources are not as easily differentiable as those of magnetite

or ilmenite samples. Therefore, the Cerro Prieto, Niltepec, provenance for M-160 is indicated but not proven.

The next phase of the analysis was determining the total magnetic moment vector of the sample and assessing the variation of internal magnetic structure. This was done with the Princeton Applied Research SM2 spinner magnetometer (*28*). With the artifact clamped into a 4.3-cm-square plastic cube and spun in various orientations in the spinner magnetometer, the three orthogonal components of the total magnetization vector can be directly read digitally in emu units.

The averaged results for 12 trials gave vector components of $m_x = .139$, $m_y = -.637$, and $m_z = .887$ emu for M-160 in the coordinate system shown in Fig. 6. The total magnitude of the vector is 1.1 emu and lies close to the floating plane of the artifact. Arc tangent (m_y/m_z) gives a geomagnetic azimuth of $-35.7°$, entirely consistent with the previously obtained values determined by Mössbauer analysis and from flotation on mercury. Arc tangent (m_x/m_z) gives an angle of only 8.9° below the y-z plane of flotation. Thus, M-160 should perform well as a magnetic pointer.

Hematite is a brittle crystalline mineral. During the analysis M-160 was fractured along a flat crystal plane approximately 1 cm from the flat finished end of the bar (*29*). The two fragments were spun separately for six trials each (in the same coordinate system shown in Fig. 6) and then reassembled and spun again. The small fragment had magnetic moment vector components of $m_x = .094$, $m_y = -.375$, and $m_z = .196$ emu with arc tangent $(m_y/m_z) = -62.4°$ and arc tangent $(m_x/m_z) = 25.6°$. The large fragment possessed components $m_x = .046$, $m_y = -.272$, and $m_z = .678$ emu with arc tangent $(m_y/m_z) = -21.9°$ and arc tangent $(m_x/m_z) = 3.9°$. Analysis of the separate fragments revealed a very substantial internal variation in the orientation of the magnetic moment vector in M-160. When the two fragments were reassembled, the original total vector orientation was recovered. All indications are that the present magnetic structure of M-160 is the original (that is, that of the mineral specimen from which it was manufactured). Only heating above the inversion point (at least 275°C) could effectively alter the internal magnetic field (*30–32*).

Two factors are now apparent. The missing fragment of M-160, when joined with the present sample, could have substantially altered the total magnetic moment vector. The larger the missing fragment, the greater the potential effect. Second, as a bar is made longer or thinner, there is a tendency for the body of the bar to conduct the magnetic field lines along the long axis. This property would tend to make any long magnetic "needle" more polarized and cause it to align itself to magnetic north-south. If the original bar was approximately twice as long (6 or 7 cm) as M-160 or longer, there is a strong likelihood that it would have aligned itself close to magnetic north-south. If I assume that the groove was intended to angle symmetrically across the face of the bar for some reason, I obtain a length for the original of approximately 7 cm. This highly speculative estimate suggests that the present artifact M-160 represents about half the original object and that the original might well have oriented itself to roughly geomagnetic north-south.

Although there is no concrete evidence for geomagnetic orientation of Olmec sites, I would like to suggest the possibility for future examination. To begin to speculate quantitatively on geomagnetic orientations, one must know the local geomagnetic declination at the time of the construction of the site. Such information is not now available for Mesoamerica in the first millenium B.C., although it will probably become available in a preliminary form within a few years. Du Bois (*33*) has now established the archeomagnetic history of the geomagnetic inclination and declination for the southwestern United States from A.D. 200 to the present. These curves are based on archeomagnetic data from archeological sites in the Southwest, which have been independently dated from tree rings, by carbon-14, and by comparisons of pottery. The data show large fluctuations in geomagnetic declination over periods of a few hundred years. Indeed, the declination could change by 30° in less than 400 years. Furthermore, although Fourier analysis of the data is consistent with the superposition of two sinusoidal fluctuations with periods of 240 and 630 years, the data could still represent a random walk phenomenon—that is, the curve of geomagnetic declination versus time cannot be extrapolated forward or backward in time. DuBois now has many archeomagnetic samples from Mexico and Guatemala, including 19 groups of samples earlier than 600 B.C. which are in a very preliminary stage of analysis. Any quantitative discussion of geomagnetic alignments of Formative sites must await the results of this analysis.

Conclusions

Considering the unique morphology (purposefully shaped polished bar with a groove) and composition (magnetic mineral with magnetic moment vector in the floating plane) of M-160, and acknowledging that the Olmec were a sophisticated people who possessed advanced knowledge and skill in working iron ore minerals, I would suggest for consideration that the Early Formative artifact M-160 was probably manufactured and used as what I have called a zeroth-order compass, if not a first-order compass. The data I have presented in this article support this hypothesis, although they are not sufficient to prove it. That M-160 could be used today as a geomagnetically directed pointer is undeniable. The original whole bar may indeed have pointed close to magnetic north-south. The groove functions well as a sighting mark, and the slight angle it makes with the axis of the bar appears to be the result of calibration rather than accident. A negative supporting argument is that M-160 looks utilitarian rather than decorative, and no function for the object other than that of a compass pointer has been suggested by anyone who has examined it critically. Whether such a pointer would have been used to point to something astronomical (zeroth-order compass) or to geomagnetic north-south (first-order compass) is entirely open to speculation.

The observation of the family of Olmec site alignments 8° west of north is a curiosity in its own right, and the possibility that these alignments have an astronomical or geomagnetic origin should be explored.

I also believe that it is constructive to compare the first millennium Chinese, who used the lodestone compass for geomancy, with the Gulf Coast Olmec since both were agrarian-terrestrial societies. The Olmec's apparent concern with orientation and skillful use of magnetic minerals also stimulates one to draw cross-cultural parallels.

The evidence and analysis offered in this article provide a basis for hypotheses of parallel cultural developments in China and the Olmec New World. If the Olmec did discover the geomagnetic orienting properties of lodestone, as did the Han Chinese, it is most reasonable to speculate that they would have used their compass for comparable geomantic purposes. It should, however, be recognized that the Olmec claim, if documented, predates the Chinese discovery of the geomagnetic lodestone compass by more than a millennium.

At present, M-160 is a unique artifact and San Lorenzo a unique site: "The first civilized center of Mesoamerica and probably of the New World" (*19*, p. 89). Further documentation of the Olmec claim must await the discovery of similar artifacts in museums, private collections, or as yet undiscovered Olmec sites.

I would welcome communications from anyone possessing information relating to such artifacts. Regardless of shape, pur-

posefully grooved and highly polished specimens of magnetic minerals are of particular interest. It would also be useful for the archeologist excavating Olmec burials and offerings to carefully note their alignments and consider them in a geomantic context.

In addition to the discovery of supporting artifacts, establishment of Olmec primacy of the lodestone compass depends on the acquisition of the archeomagnetic data for the Early Formative period. I appeal to archeologists who find good archeomagnetic samples (burned hearths and postholes) from the Formative periods to convey this information to R. DuBois of the University of Oklahoma. In a few years, the archeomagnetic data should be available for the last three millennia and the possibilities are very exciting.

References and Notes

1. J. Needham, *Science and Civilisation in China* (Cambridge Univ. Press, Cambridge, England, 1962), vol. 4, part 1.
2. M. D. Coe, personal communication.
3. _____, *Map of San Lorenzo* (Department of Anthropology, Yale University, New Haven, Conn., 1968).
4. _____, in *Dumbarton Oaks Conference on the Olmec*, E. P. Benson, Ed. (Dumbarton Oaks, Washington, D.C., 1968).
5. _____, *Science* **155**, 1399 (1967).
6. Christian calendar dates are used throughout this article. The corresponding radiocarbon dates (based on a 5730-year half-life for ^{14}C) are 1200 to 900 B.C., implying a shift of ~ 200 and 100 years, respectively, for the current correlations. See V. R. Switsur, *Antiquity* **47** (No. 186), 131 (1973).
7. This initial experiment is described briefly in print only in R. Fuson, *Ann. Assoc. Am. Geogr.* **3**, 508–509 (1969). My information is directly from M. D. Coe.
8. P. T. Furst, in *Dumbarton Oaks Conference on the Olmec*, E. P. Benson, Ed. (Dumbarton Oaks, Washington, D.C., 1968), p. 143.
9. J. Wheeler Pires-Ferreira, thesis, University of Michigan (1973).
10. _____ and B. J. Evans, "Mössbauer spectral analysis of 'Olmec' iron ore mirrors," preprint of paper presented at the 9th International Congress of Anthropological Science, Chicago, 1973.
11. A technical analysis of the concave mirrors of La Venta and speculation about their use is found in J. E. Gullberg, in *Excavations at La Venta Tabasco, 1955*, P. Drucker, R. F. Heizer, R. J. Squier, Eds. (Government Printing Office, Washington, D.C., 1959), pp. 280–283.
12. Parabolizing in this context means that the radius of curvature increases as it moves away from the central axis of symmetry.
13. G. Ekholm, personal communication.
14. K. V. Flannery, in *Dumbarton Oaks Conference on the Olmec*, E. P. Benson, Ed. (Dumbarton Oaks, Washington, D.C., 1968).
15. E. J. Eitel, *Feng-Shui or the Rudiments of Natural Science in China* (Land of Cokaygne, Cambridge, England, 1973).
16. P. Wheatley, *The Pivot of the Four Quarters* (Aldine, Chicago, 1971).
17. J. Needham (*1*, p. 239). The first sentence in this quotation (marked by ellipsis points) actually appears just after the main body of the quotation in Needham's text. It was transposed for the sake of clarity and emphasis.
18. See, for example, I. Bernal, *The Olmec World* (Univ. of California Press, Berkeley, 1969), figure 2, p. 34.
19. M. D. Coe, *America's First Civilization* (American Heritage, New York, 1968).
20. M. Hatch [in *Papers on Olmec and Maya Archaeology* (Archeological Research Facility, Univ. of California, Berkeley, 1971), pp. 1–64] presents a rather complex astronomical interpretation for the La Venta orientation based on celestial observations supposedly made by the Olmec at least a millennium before the Formative La Venta complex was built. Hatch proposes (p. 10) "that the La Venta site complex was aligned to this setting azimuth of CP Ursae Majoris [8° west of north] because it had been learned around 2000 B.C. that its meridian transit and point of contact with the horizon occurred at midnight of the summer solstice, and in this way the solar year had been 'keyed' to the sidereal year." Hatch also supports her theory with an interpretation of Olmec iconography and symbolism.
21. This calculation was checked by using the "Astronomical tables intended for use in astro-archaeological studies" in A. F. Aveni, *Am. Antiquity* **37**, 531 (1972) and computer-printed tables supplied separately by Aveni.
22. The floating plane is defined to be the plane of M-160 parallel to the liquid surface on which it is floating (with the grooved face up). This is the *y-z* plane in Fig. 6.
23. A. Maudslay, *Biologia Centrali-Americana* (London, 1899–1902), p. 20.
24. E. H. Thompson, *Mem. Peabody Mus. Am. Archaeol. Ethnol.* **1** (No. 2), 14 (1897).
25. T. W. F. Gann, in *Proceedings of the 21st International Congress of Americanists* (Göteburg, 1925), p. 279.
26. A. V. Kidder, J. D. Jennings, E. M. Shook, *Carnegie Inst. Wash. Publ. 561* (1946), pp. 144–145.
27. The spectra were taken by B. J. Evans, Department of Geology and Mineralogy, University of Michigan, Ann Arbor.
28. The experiment was performed in the paleomagnetism laboratory of R. DuBois, University of Oklahoma, Norman.
29. This quasi-serendipitous situation was created accidentally by G. Turner, a graduate student and spinner magnetometrist at the University of Oklahoma, on 7 June 1974. Dropped on a table from a height of about 20 cm, M-160 broke neatly into two pieces along a flat crystal plane approximately 1 cm from the flat finished end of the bar. This accidental breakage yielded useful information about the stability and large variation in orientation of the internal magnetic field of M-160.
30. E. Irving, *Paleomagnetism* (Wiley, New York, 1964).
31. T. Nagata, *Rock Magnetism* (Maruzen, Tokyo, 1961).
32. An inversion temperature of 275°C is a conservative figure for the change in magnetic properties for hematite. Maghemite (γ-Fe_2O_3) is metastable and reverts to α-Fe_2O_3 (α-hematite) on being heated to the inversion temperature (275°C, but sometimes reported as 400° to 800°C) (*31*, pp. 84–86). In ferromagnetic and ferrimagnetic minerals the spontaneous magnetization falls as the temperature increases, disappearing at the Curie temperature or Curie point, T_C; above T_C the crystal is paramagnetic. In antiferromagnetic minerals the ordering is lost at the Néel temperature, T_N, above which the crystal is paramagnetic. Certain minerals, such as hematite, possess a feeble spontaneous magnetization, which is superposed on an antiferromagnetic structure and disappears along with the antiferromagnetism at T_N; this may be due to imperfect antiparallel alignment or to a small parasitic component (*30*, p. 12). The critical temperatures for both α- and γ-Fe_2O_3 are approximately 675°C (*31*, pp. 84–86, 101–105). Therefore, 275°C is a conservative figure for the temperature at which the magnetic properties of M-160 would be substantially altered.
33. R. L. DuBois, personal communication.

34. I give special thanks to Michael Coe for permitting me to examine the San Lorenzo artifact and for much helpful encouragement and enthusiasm, B. J. Evans for his warm offer of help and expertise in providing the Mössbauer spectral data and analysis, and Robert DuBois and his students for the very useful discussions of the archeomagnetic record and the spinner magnetometer analysis. I also thank Kent Flannery, Robert Fuson, David Grove, David Joralemon, and Mary Buchwald for stimulating discussions and ideas and Anthony Aveni for introducing me to the fantastic civilizations of the pre-Columbian New World.